SEER ROBOTICS

SRC INSIDE

AMB-JS

Laser SLAM Safety Jacking Transfer Robot

AMB-JS

Safe Jacking, Superb Load Capacity

CE Safety certified, Outstanding Performance& Excellent Safety Standard by Design

Obtion CE certification (ISO 3691-4:2020) and other certifications.

Application Scenario

Charge 1H, Full Load Endurance 7H

The charging pile is optional for 40A quick charge, 1 hours of charging for 7 hours of running.

±5mm Accuracy, Laser SLAM Navigation

SLAM navigation accuracy of ±5mm, without reflectors.

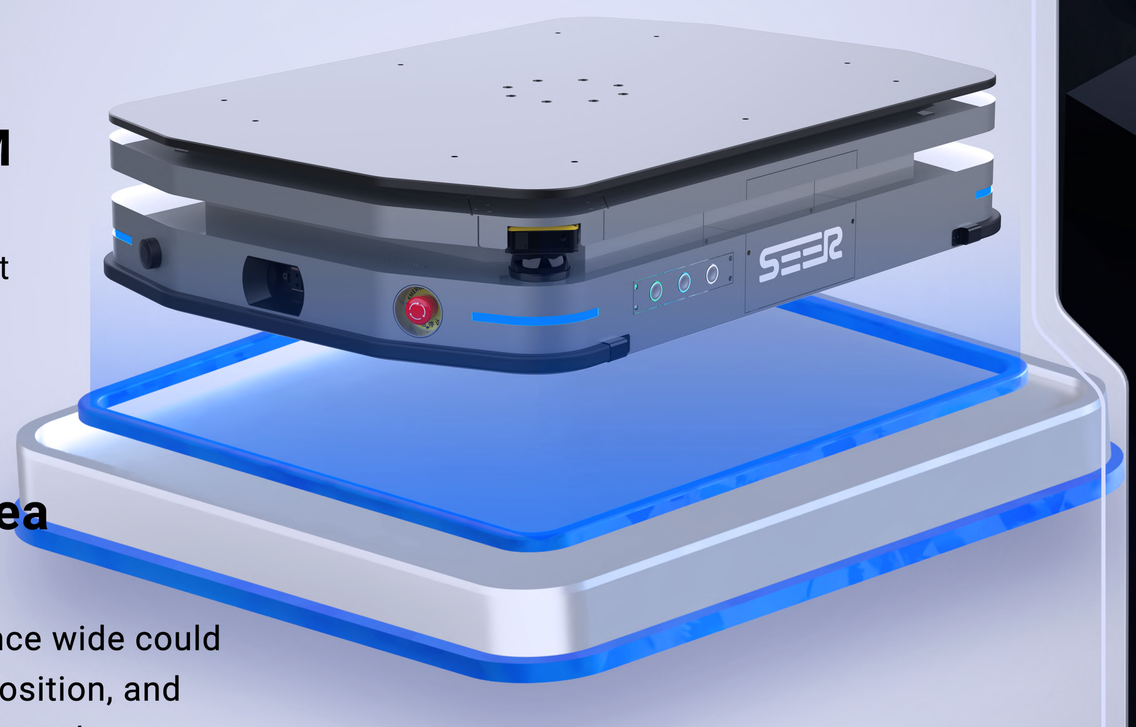

Single-sided 7cm+ Wide Area Rack Identification

The AGV of support unilateral 7cm+distance wide could accurately recognize the rack, adjust its position, and drive precisely into it, successfully lift the goods.

Two Load Specifications of 500/1000kg

Optional 500kg or 1000kg load models, catering to the load requirements in multiple scenarios.

Scan to Follow

Linkedin YouTube

SEER ROBOTICS

Parameter Specification

● Standard ○ Optional - None

Basic parameters

	AMB-JS
Navigation method	*Laser SLAM*
Drive mode	*Two-wheel differential*
Shell color	*Cool Gray*
L*W*H	*1330mm*952mm*290mm*
Rotation diameter	*1460mm*
Weight (with battery)	*265kg*
Load capacity	*500kg/1000kg*
Chassis ground clearance	*30mm*
Jacking platform dimensions	*1300mm*920mm*
Maximum jacking height	*60±1mm*
jacking time	*9±0.5s*
Laser scanning height	*175mm*
Network	*Ethernet / Wi-Fi 802.11 a/b/g/n/ac*
Ambient temperature and humidity range	*TEMP: 0~50℃/RH: 10~90%, no compression, no condensation*
IP rating	*IP20*

Performance parameters

Passability (slope/step/gap)	*≤5%/5mm/10mm*
Minimum passable width	*1050mm*
Navigation position accuracy	*±5mm*
Navigation angle accuracy	*±1°*
Navigation speed	*≤1.5m/s*
Map area (single frame)	*≤200000m²*

Battery parameters

Battery specifications	*48V/40AH (Lithium Iron Phosphate)*
Comprehensive battery life	*7h*
Automatic charging parameters	*54.6V/40A*
Charging time (10-80%)	*≤2h*
Charging method	*Manual/Automatic*
Battery cycle number	*>1500 times*

Configurations

Lidar number	*2 (SICK nanoScan3)*
Number of low-position obstacle avoidance photoelectric	-
Cargo detection	○
E-stop button	●
Speaker	●
Atmosphere light	●
Bumper strip	●

Functions

Basic functions	●
Wi-Fi roaming	●
Automatic charging	●
Shelf recognition	●
Spin	-
Precise location with QR code	-
QR code navigation	-
Laser reflector navigation	○

Certifications

EMC/ESD	●
UN38.3	●
MD/ISO3691-4	●
RED	●

Dimension (mm)

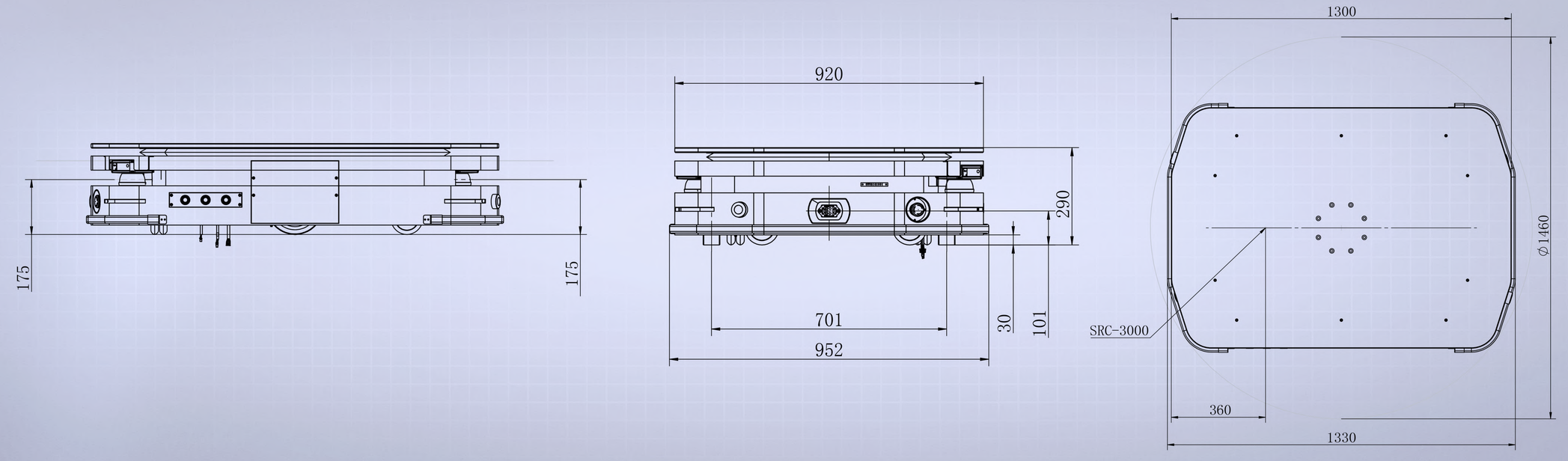

Tel: +86-18321029192
E-mail: contact@seer-group.com
Web: www.seer-group.com